HX100M4

MAGNETIC PORTABLE CHARGER POWER BANK



USER MANUAL

Please read this user manual carefully before using the product.

Product Introduction

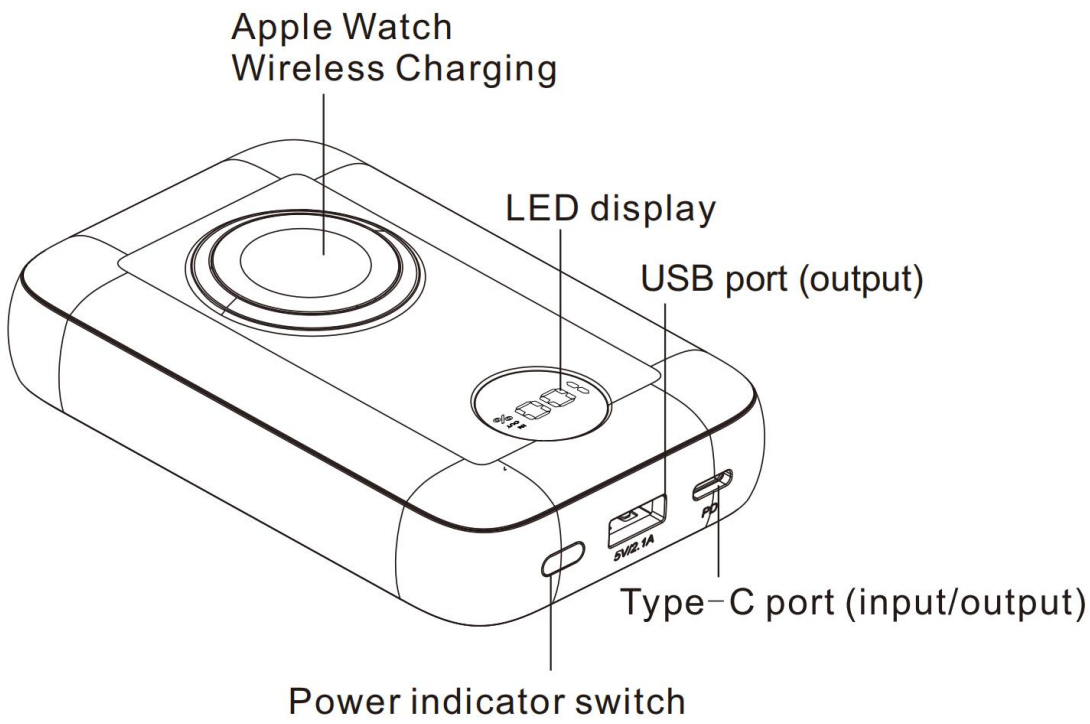

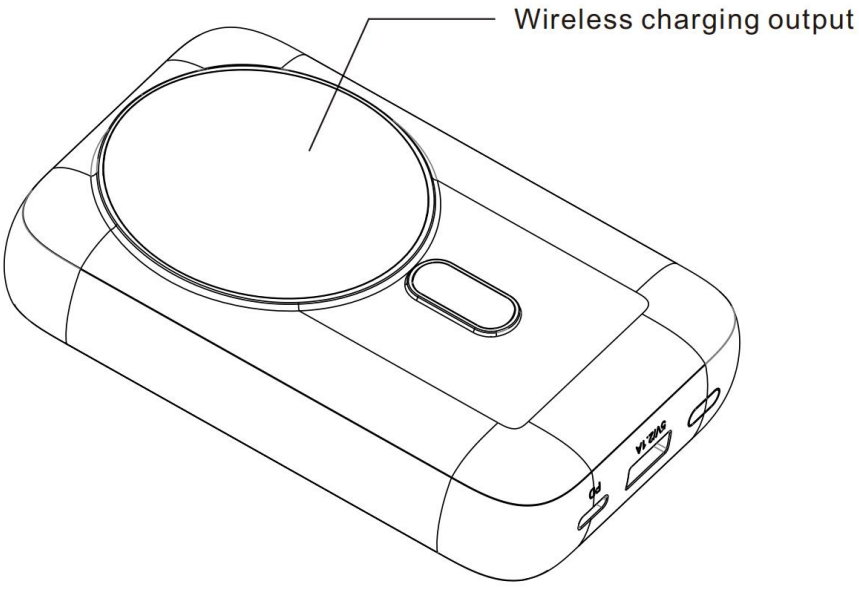

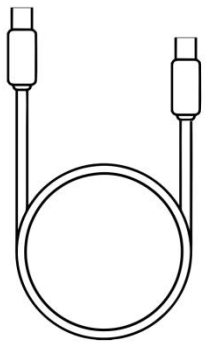

USB Charging Cable

Specification

Product Name	Magnetic Portable Charger Power Bank
Model	HX100M4
Battery Capacity	10800mAh(41.58Wh)
Wireless Charging Output	7.5W
Watch Charging Only for Apple Watch	3W
Type-C Input	5V/3A,9V/2A
Type-C Output	5V/3A,9V/2.22A,12V/1,67A,4.5V/5A
USB-A Output	5V/3A,9V/2A
Product Size	4.4*2.8*1 inch
Product Weight	221g
Packing List	Power Bank*1,User Manual*1,USB Cable*1

How to Use Magnetic Wireless Power Bank?

Charge for Your iPhone

-Align the back of the iPhone for wireless charging to the power bank (as shown below), press the power button to active the wireless charging function. Please ensure a tight fit between the two, otherwise it may cause charging interruption or reduced efficiency.

--Once connected, the power bank and iPhone will display the charging status. If misalignment, please try to adjust the iPhone's position or restarting the power bank.

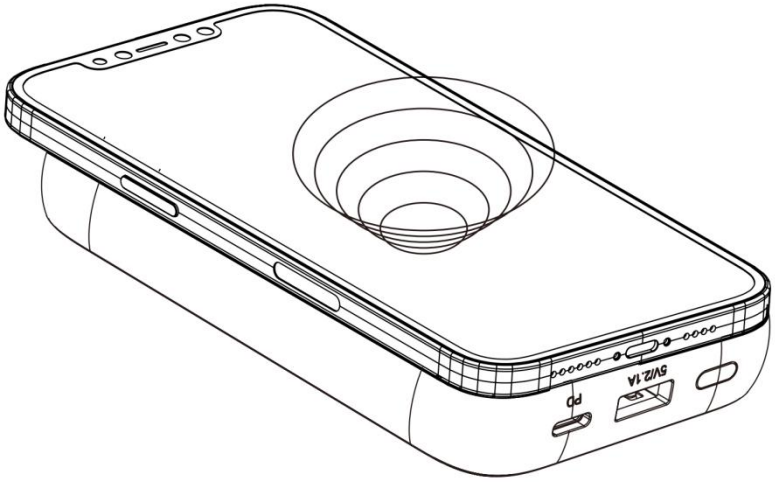

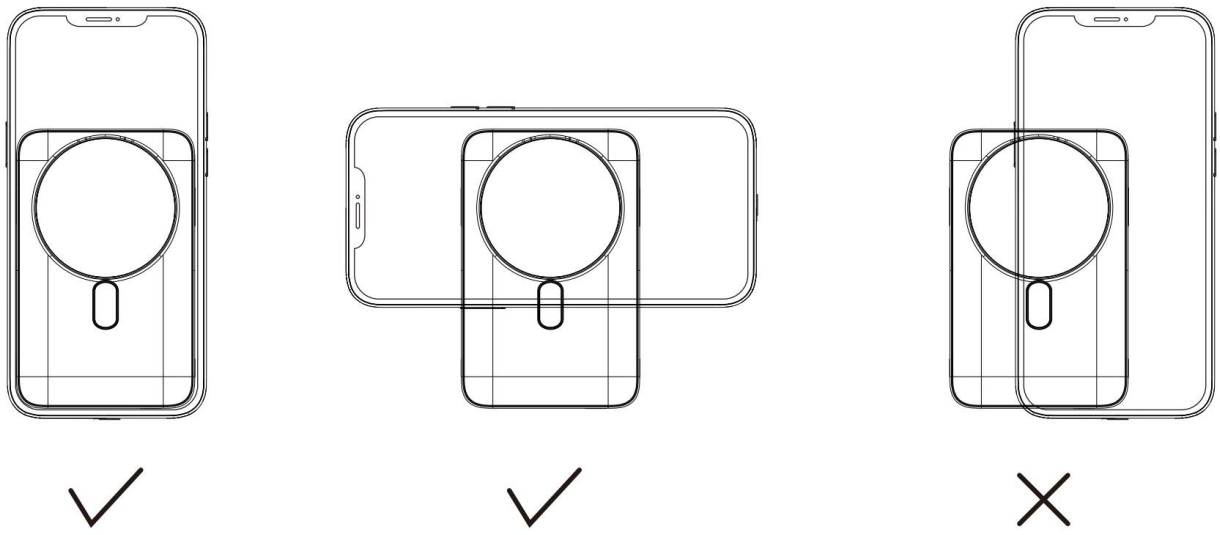

Charge for Your Apple Watch

-Align the back of the apple watch for wireless charging to the power bank (as shown below), press the power button to active the wireless charging function.Please ensure a tight fit between the two, otherwise it may cause charging interruption or reduced efficiency.

--Once connected, the power bank and Apple Watch will display the charging status. If misalignment, please try to adjust the watch's position or restarting the power bank.

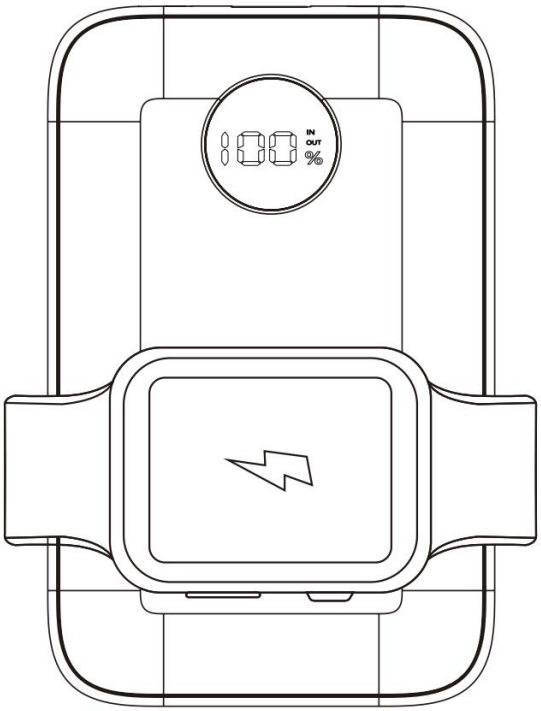

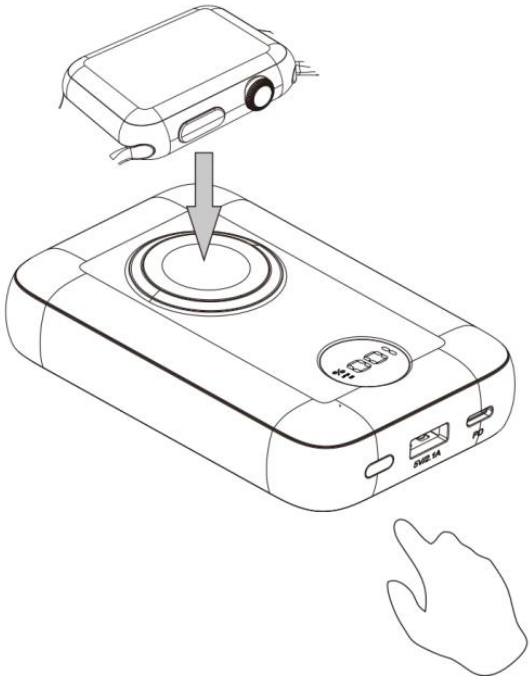

Attention



1. NOT Compatible with Non-Magnetic Phone Cases.
2. Magnetic Wireless charging only for the iPhone 12 ~16 Series or later.
3. Watch Charging: Only Compatible with Apple Watch.

Multiple Charging Mode with USB Ports

2.Charge Through USB-A/C Port:

Take out the charging cable that coming with your phone, connect the correct port to the power bank and your phone respectively.

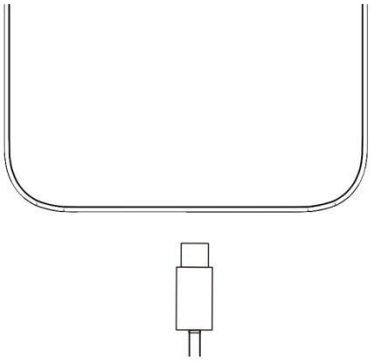

Once connected, the power bank will automatically turn on and charge your phone.

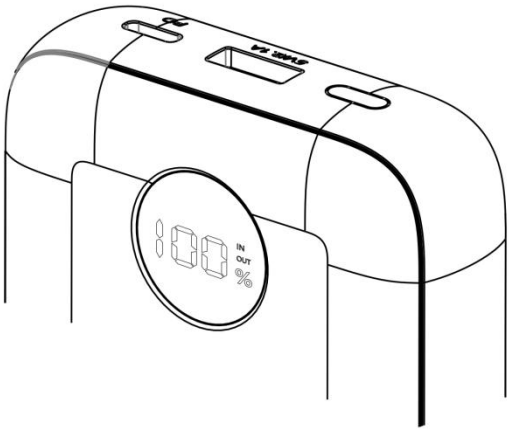

When charging, the LED screen lights up and the digital display indicates the left battery percentage.

How to Recharge the Power Bank

Recharge Through Type C Input Port

Please use the included charging cable to connect the usb c port of the power bank and an AC adapter or a power supply device with a USB-C jack(such as a PC).

- When charging,the LED screen lights up and shows the current battery percentage.
- When the LED digital display indicates"100%",the power bank is fully charged.

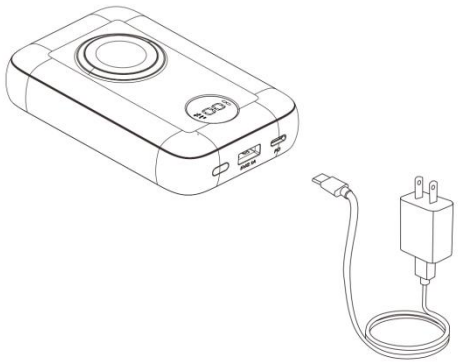

Note

1.The AC adapter is not included in the package.

2.For faster charging, please recharge the power bank using an adapter with 18W or higher power output.

3.The included charging cable is used to charge your devices or recharge the power bank.

4.When charging or discharging, some heat may be generated due to energy loss during transmission.

Power Button Function

- Press the power button once, the power bank will turn on and the LED screen will light up to show the remaining battery percentage.

- Press the power button twice, the power bank will turn off and the LED screen will go out.

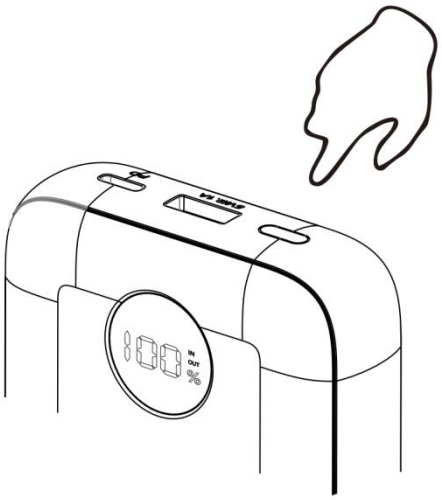

LED Display Status

1.Input:

Digital display digit flashes while recharging the power bank. the digital display will go out after 30s, you can press the power button once to check whether the power bank is fully recharged.

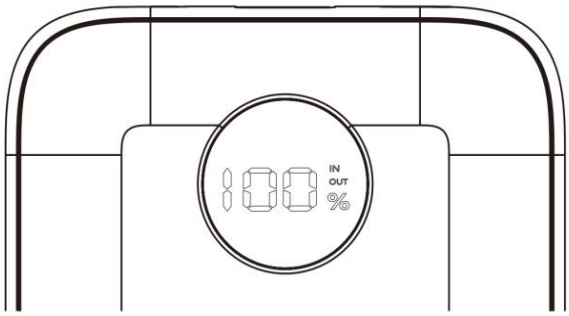

2.Output:

When discharging,the digital display will go out after 30s, you can press the power button once to check the remaining power.

Important Safety Instructions

Please read below warm tips carefully before using the product.

(1)Please store it out of the reach of little children.

(2)Store product in a cool and dry place.

(3)Do not store the product in hot or humid environments.

(4)Do not dispose of the product in heat or fire.

(5)Do not clean the product with harmful chemicals or detergents.

(6)Misuse,dropping,or excessive force may cause product damage.

(7)Operating temperature should be between 32℉ to 113℉/0℃to 45℃.

(8)If the battery is hot or abnormal,please discontinue use immediately.

(9)If the product is not being used a long time,it should be charged and discharged every three months.

(10)The product may feel warm when charging the device,which is a normal operating situation and should not be a cause for concern.

(11)The power USB interface of this product is specially used for charging and powering USB devices.Please do not use this product for other purposes.

(12)Do not disassemble the product.Take it to a qualified service person when repair is required.Incorrect reassembly may result in a risk of injury.